M5-0-10-HVAC DETAILS
Project Management Initials: Designer: Designer Checked: Checker Approved: Approver/ARCH E1 30"x42"

Building Inspection Division
THESE PLANS HAVE BEEN REVIEWED FOR COMPLIANCE WITH THE CURRENT EDITION OF THE FLORIDA BUILDING CODE
Date: 11/15/19
Permit Number: BLD19-06035

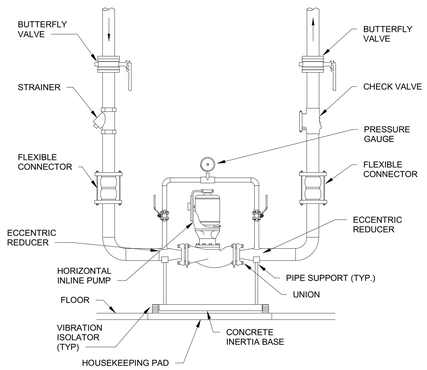

1 HORIZONTAL INLINE PUMP CONNECTION1
NOT TO SCALE

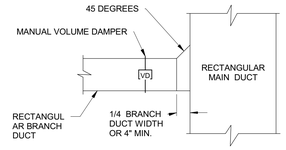

2 BRANCH DUCT DETAIL1
Scale: 12" = 1'-0"

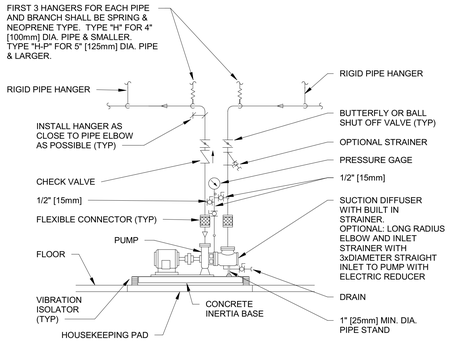

DETAIL NOTES:
1. SEE SPECIFICATION SECTION "PUMPS" FOR Y STRAINER OPTION.

3 SINGLE SUCTION FLOOR - MOUNTED PUMPS CONNECTIONS W/ FLEXIBLE CONNECTORS
Scale: 1/8" = 1'-0"

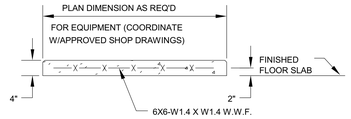

INTERIOR EQUIPMENT PAD

5 CONCRETE PAD DETAIL
Scale: 12" = 1'-0"

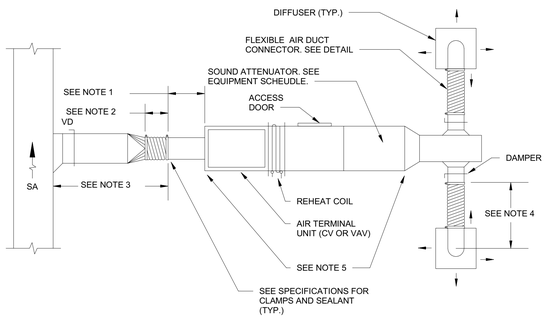

NOTES:

1. RIGID STRAIGHT TERMINAL UNIT INLET LENGTH SHALL BE A MINIMUM OF 3 TIMES THE DIAMETER OF INLET.
2. A FLEXIBLE AIR DUCT CONNECTOR IS NOT MANDATORY FOR INLET TO THIS BOX, BUT ALLOWED TO ACCOMMODATE MINOR OFFSETS. MAXIMUM LENGTH 3'-0" [900MM]
3. A BRANCH DUCT SERVING AN INDIVIDUAL BOX MAY BE THE SAME SIZE AS THE BOX INLET, PROVIDED THE EQUIVALENT LENGTH OF THE BRANCH DUCT, AS SHOWN, DOES NOT EXCEED 10 FEET (3 METERS). FOR LONGER LENGTHS, INCREASE THE DUCT SIZE AND PROVIDE A DUCT TRANSITION TO MAINTAIN THE DUCT STATIC PRESSURE DROP AT OR BELOW 0.2"/100' [1.64Pa/M].
4. FLEXIBLE AIR DUCT CONNECTORS, WHEN USED FROM TERMINAL UNIT SUPPLY AIR DUCT TO DIFFUSER, SHALL NOT EXCEED 5'-0" [1500mm]. USE RIGID ELBOWS FOR CHANGE OF DIRECTION GREATER THAN 45°. REFER TO SUPPLY DIFFUSER CONNECTION DETAIL.
5. COMPONENT ARRANGEMENT MAY VARY BY MANUFACTURER. PROVIDE INSULATION W/ VAPOR BARRIER FOR CONNECTING DUCT SECTIONS.

4 DUCT CONNECTIONS - AIR TERMINAL UNITS
Scale: 1/8" = 1'-0"

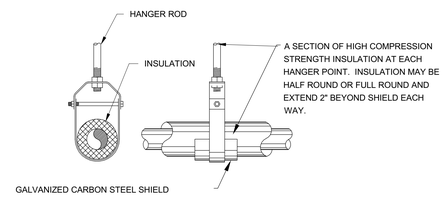

6 PIPING HANGER DETAIL 1
Scale: 12" = 1'-0"

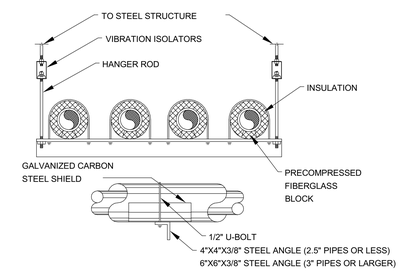

7 PIPING HANGER DETAIL 2
Scale: 12" = 1'-0"

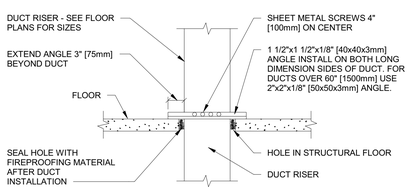

0.5 INCH WG [125Pa] TO 2 INCHES WG [500Pa] DUCT RISER SUPPORT

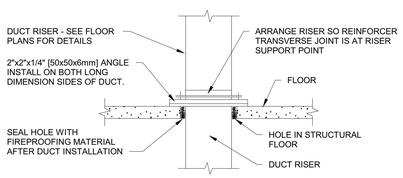

2 INCHES WG [500Pa] TO 4 INCHES WG [1000Pa] DUCT RISER SUPPORT

DETAIL NOTES:
1. ALL DUCT WORK RISERS WHICH ARE RUN EXPOSED, SUCH AS THRU ATTIC FLOORS AND FAN ROOM FLOORS SHALL BE PROVIDED WITH A 3" [75mm] HIGH CONCRETE CURB AROUND OPENING FOR DUCT.

8 DUCT RISER SUPPORTS
Scale: 1/8" = 1'-0"

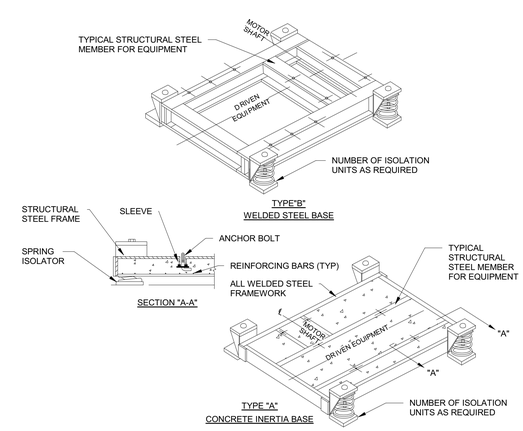

9 VIBRATION ISOLATION BASES
Scale: 1/8" = 1'-0"

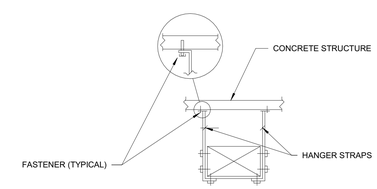

STRAP HANGER

NOTES:
1. FOR STRAP AND TRAPEZE HANGER SIZE, REFER TO SMACNA DUCT STANDARDS
2. NO POP RIVETS ALLOWED, USE SELF-TAPPING SHEETMETAL SCREWS ONLY

10 DUCT HANGER DETAIL
Scale: 1/8" = 1'-0"

AECOM
BATSON-COOK CONSTRUCTION

PROJECT

PUBLIX HEADQUARTERS BUILDING ADDITION AND PARKING LOT EXPANSION

3300 PUBLIX CORPORATE PARKWAY
LAKELAND, FL 33811

CLIENT

Publix

3300 PUBLIX CORPORATE PARKWAY
LAKELAND, FL 33811

www.publix.com

CONSULTANT

AECOM

AECOM TECHNICAL SERVICES INC.
800 Douglas Entrance
North Tower, 2nd Floor
Coral Gables, FL 33134
305.444.4691 tel 305.447.3580 fax
www.aecom.com

ARCHTIECTURE
LICENSE NO. AA260000687

ENGINEERING
CA LIC. NO. 8115

www.aecom.com

REGISTRATION

JOHN TYE RECTOR
LICENSE
No. 53292
STATE OF FLORIDA
PROFESSIONAL ENGINEER

JOHN T. RECTOR, PROFESSIONAL ENGINEER, STATE OF FLORIDA, LICENSE NO. 53292
08/22/19

John T Rector
John T Rector 2019.08.22 15:48:15 -04'00'

THIS ITEM HAS BEEN DIGITALLY SIGNED AND SEALED BY JOHN T. RECTOR, PROFESSIONAL ENGINEER, STATE OF FLORIDA, LICENSE NO. 53292 ON THE DATE ADJACENT TO THE SEAL. PRINTED COPIES OF THIS DOCUMENT MUST BE VERIFIED ON ANY ELECTRONIC COPIES.

NOTICE: THE OFFICIAL RECORD OF THIS SHEET IS THE ELECTRONIC FILE SIGNED AND SEALED UNDER RULE 61G15-23.004, F.A.C.

ISSUE/REVISION

I/R	DATE	DESCRIPTION
	AUG 23, 2019	CONSTRUCTION DOCUMENTS
	MAY 31, 2019	35% DESIGN COMPLETION

PROJECT NUMBER
60601397

SHEET TITLE
HVAC DETAILS

SHEET NUMBER
M5-0-10

Last Plotted: 8/22/2019 3:14:51 PM
Filename: BM 360./60601397-Publix HQ/60601397_Publix HQ_MECH_R2019.rvt

Printed on ___% Post-Consumer Recycled Content Paper

©2016 AECOM Corporation